SINGLE RANGE TIMER EH3-AB

CHARACTERISTICS

- Exclusive CMOS IC assures high performance stability, and accuracy.
- High repeat accuracy ± 1%.
- Short resetting time-100 msec. ax.
- Wide variety of type-14 time ranges. (0.1 sec. to 10 hrs)
- 2 modes selectable via slide switch: Mode A(2C) for DPDT time-limiting output contacts and Mode B(1A1C) for SPDT instantaneous and time-limiting output contacts

TIME RANGE

RATED TIME	TIME SETTING RANGE	Operating Voltage
1S	0.15~1S	
3S	0.35~3S	DC 12V
6S	0.65~6S	
10S	1S~10S	DC 24V
30S	3S~30S	
60S	6S~60S	AC 110V 50/60Hz
3M	10S~180S	
6M	20S~6M	AC 220V 50/60Hz
10M	30S~10M	
30M	2M~30M	AC 380V 50/60Hz
60M	3M~60M	
3H	10M~3H	AC 440V 50/60Hz
6H	20M~6H	
10H	30M~10H	

OPERATION TIME CHART

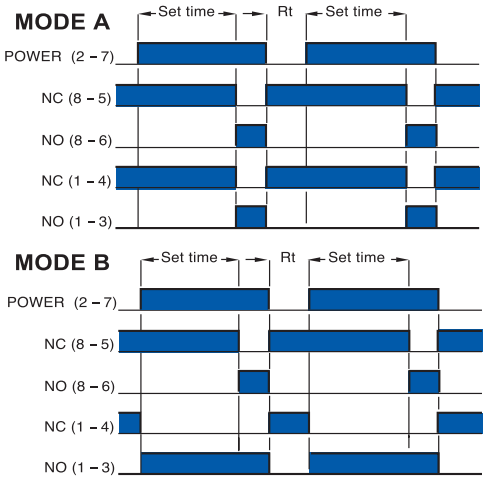

SPECIFICATIONS

RATED VOLTAGE	AC 110V, 220V, 380V, 440V, DC 12V, 24V,
Rated frequency	50/60Hz.
ORERATING VOLTAGE	AC 85-110% of rated voltage. DC 80-110% of rated voltage.
CONSUMED POWER	About 2VA FOR AC. About 2W FOR DC.
CONTROL METHOD	Time-limit operation Self-resetting
CONTACT RATING	250V AC 10A(P.F.=1)
AMBIENT TEMP.	-10˚C~+55˚C
AMBIENT HUMIDITY	45~85% RH
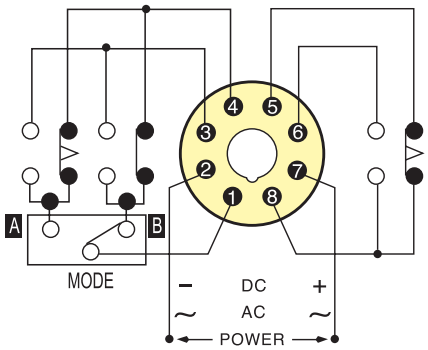
CONNECTION DIAGRAM