LIMIT SWITCH

mm

Panel mount cross roller plunger

AZ 7312

Operating Force .....600 g max.
Release Force .....100 g min.
Pretravel .....2.0 mm max.
Movement Differential ....0.8 mm max.
Overtravel .....6.0 mm min.
Operating Position .....33.3 ± 1.2 mm

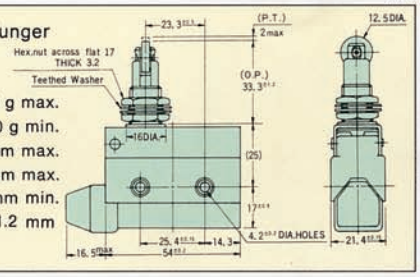

One way roller lever

AZ 7124

Operating Force .....200 g max.
Release Force .....60 g min.
Pretravel .....11 mm max.
Movement Differential ...2.4 mm max.
Overtravel .....3.0 mm min.
Operating Position .....50 ± 2.0 mm

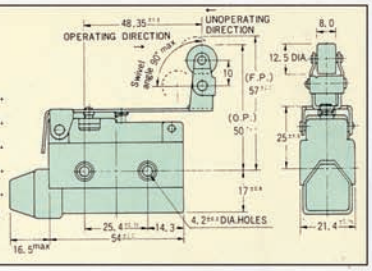

One way roller short lever

AZ 7144

Operating Force .....280 g max.
Release Force .....100 g min.
Pretravel .....6.5 mm max.
Movement Differential ....1.5 mm max.
Overtravel .....2.0 mm min.
Operating Position .....50 ± 1.6 mm

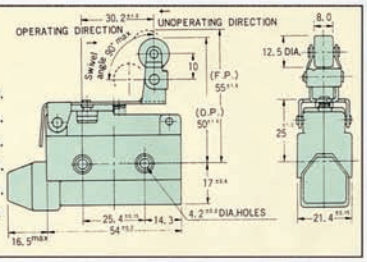

AZ 7166

Operating Force .....120 g max.
Pretravel .....25 mm max.
Overtravel .....11 mm min.
Totaltravel .....36 mm min.

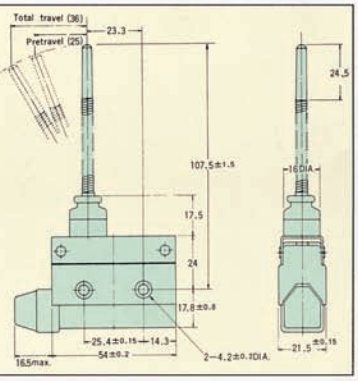

Hinge roller lever

AZ 7121

Operating Force .....180 g max.
Release Force .....50 g min.
Pretravel .....11.0 mm max.
Movement Differential...2.4 mm max.
Overtravel .....3.0 mm min.
Operating Position .....40 ± 1.9 mm

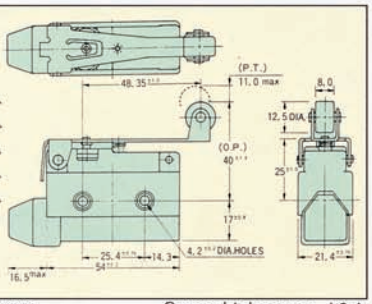

* Epoxy-sealed terminal types ** Neon lamp wired types General tolerance: ±0.4