Bosston
A QUALITY PRODUCT

SSL Selector Switches

EXPLOSIONPROOF

For UL.60079-1 Standard Class I,II Div.1 and 2 Groups C,D,E,F and G

For IEC.60079-0/1 Standard Zone 1 and Zone 2

ISO9001:2008

Technical data

Type of Protection: Ex d IIA T6

Conforming to : Standards IEC 60079-1 or UL 60079-0/1

Marking for test : Ex II2G

Degree of Protection : IP65/66 acc.To IEC 60529

Ambient Temp. (Ta) : -20°C to+ 55°C

Type :SSL

Protection class for UL. : Class I, Division1 or 2 Group.C,D
Class II, Division 1 or 2 Groups.E,F,G
Class III

Protection class for IEC : Zone1and Zone 2

Options : Silicone rubble for outdoor IP66 (Type S)

Conduit hub : 3/4" NPT.

Applications:

The SSL selector switches are suitable for

- use in hazardous areas due to the presence of flammable gases or vapors, combustible dusts or ignitible fibers.
- use in conjunction with magnetic starters or contactors for remote control of motors.
- indoor, outdoor and corrosive locations.
- circuit control of motors.

Features:

- Compact rectangular shape enclosure.
- Two mounting lugs.
- Two or three positions in switching.
- Contact rating 3A. 220V.AC. (10A. Rated thermal current).
- Single gang on request.
- 3/4" inch NPT, dead-end or through-feed conduit hub
- Smooth and well-rounded conduit stop in each hub to protect conductor insulation.

Standard Materials:

- Body, cover and handle - Copper-free aluminium
- Bolts and operating shaft - Stainless steel

Standard Finishes:

- Copper-free aluminium - Epoxy-polyester powder
- Stainless steel - Natural

Options:

☐ For 2-positions with spring return, add suffix - *P* to Cat.,No.

- Silicone rubber on cover pushbutton Type *S* for IP66

Catalogue Nubmer:

Number of contact	Diagram Left	Diagram Center	Diagram Right	Nameplate Marking	Cat.,No. Dead-end (1 hub)	Cat.,No. Through-feed (2 hub)
2 - Positions						
1NO		-		OFF - ON	SSL 210☐	SSL 210H☐
2NO		-		OFF - ON	SSL 220☐	SSL 220H☐
1NO - 1NC		-		MAN. - AUTO	SSL 211☐	SSL 211H☐
3 - Positions						
2NO				MAN.-OFF-AUTO.	SSL 320☐	SSL 320H☐
2NC				*Specify*	SSL 302☐	SSL 302H☐

SSL210
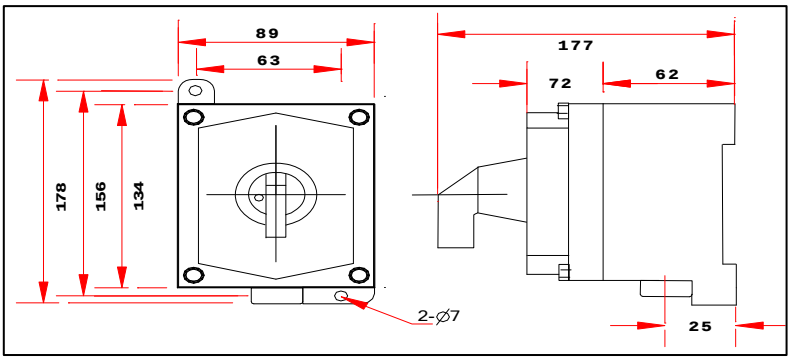
Dimensions: (in mm.)