Bosston
A QUALITY PRODUCT

PEM Emergency Push Buttons

EXPLOSIONPROOF

For UL.60079-1 Standard Class I,II Div.1 and 2 Groups C,D,E,F and G

For IEC.60079-0/1 Standard Zone 1 and Zone 2

UKAS MANAGEMENT SYSTEMS 005

ISO9001:2008

Technical data

Type of Protection: Ex d IIA T6

Conforming to : Standards IEC 60079-1 or UL 60079-0/1

Marking for test : Ex II2G

Degree of Protection : IP65/66 acc.To IEC 60529

Ambient Temp. (Ta) : -20 °C to+ 55 °C

Type :PEM

Protection class for UL. : Class I, Division1 or 2 Group.C,D
Class II, Division 1 or 2 Groups.E,F,G
Class III

Protection class for IEC : Zone1and Zone 2

Options : Silicone rubble for outdoor IP66 (Type S)

Conduit hub : 3/4" NPT.

Features:

- Compact rectangular shape enclosure.
- Two mounting lugs.
- Large mushroom-head operating button.
- Contact rating 3A. 220V.AC. (10A. Rated thermal current).
- 3/4" inch NPT, dead-end or through-feed conduit hub
- Smooth and well-rounded conduit stop in each hub to protect conductor insulation.

Standard Materials:

- Body and cover - Copper-free aluminium
- Bolts and operating shaft - Stainless steel

Standard Finishes:

- Copper-free aluminium - Epoxy-polyester powder
- Stainless steel - Natural

Options:

- Silicone rubber on cover pushbutton Type *S* for IP66
- 1/2 inch NPT size conduit hub.

Applications:

The PEM emergency push buttons are used

- for hazardous areas due to the presence of flammable gases or vapors, combustible dusts or ignitible fibers.
- as emergency or normal "STOP" switch for conveyor lines, cranes, unloaders and similar equipment.
- in the control circuit of magnetic motor starters to shut down motor-driven conveyors of other machinery.
- for indoor and corrosive locations.

Catalogue Nubmer:

Number of contact	Symbol	Nameplate Marking	Cat.,No. Dead-end (1 hub)	Cat.,No. Through-feed (2 hub)
Momentary				
1NC		EMERGENCY STOP	PEM 01	PEM 01H
1NO-1NC		EMERGENCY STOP	PEM 11	PEM 11H
Push - Lock , Turn - Reset				
1NC		EMERGENCY STOP	PEM 01L	PEM 01LH
1NO-1NC		EMERGENCY STOP	PEM 11L	PEM 11LH

PEM11L
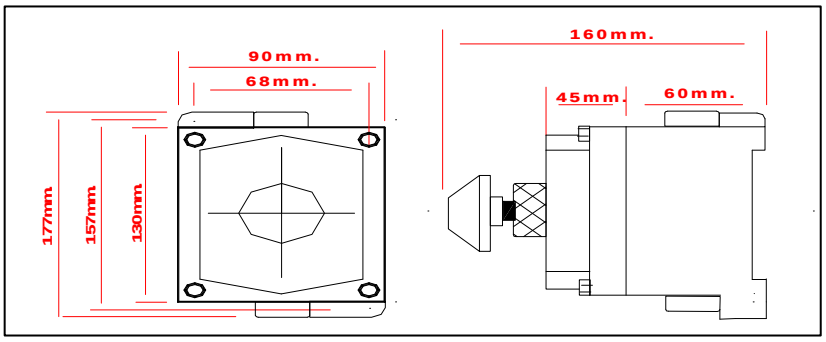
Dimensions: (in mm.)