Junction Box

Bosston
A QUALITY PRODUCT

EXPLOSIONPROOF

For UL.60079-1 Standard Class I,II Div.1 and 2 Groups C,D,E,F and G

For IEC.60079-0/1 Standard Zone 1 and Zone 2

UKAS MANAGEMENT SYSTEMS 005

ISO9001:2008

Technical data

Type of Protection: Ex d IIA T6/T5

Conforming to : Standards IEC 60079-1 or UL 60079-1

Marking for test : Ex II2G

Degree of Protection : IP 66 acc.To IEC 60529

Ambient Temp. (Ta) : -20°C to+ 55 °C

Type : JBR

Protection class for UL. : Class I, Division1 or 2 Group.C,D
Class II, Division1 or 2 Groups.E,F,G
Class III

Protection class for IEC : Zone1 and Zone 2

Specification:

- Body and Cover - Copper-Free aluminium power coated, RAL 7032
- Seal gasket - Neoprene (CR) -25°C to+ 55 °C
- Cable entries - NPT or ISO thread
- Weight - 7.5 Kgs.
- Rated voltage - max. 630V.AC. (as per equipment specification)

JBR 886

Dimension in MM.

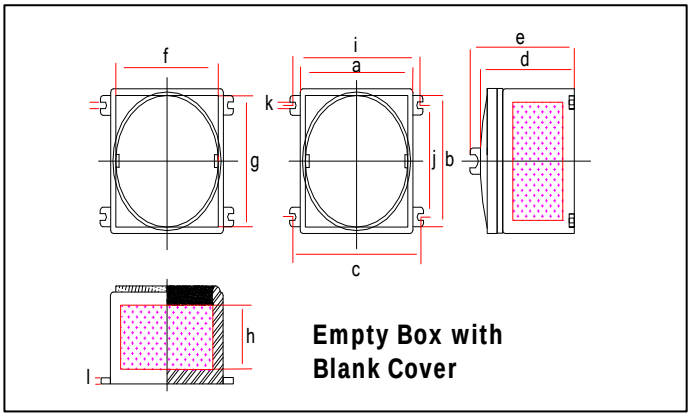

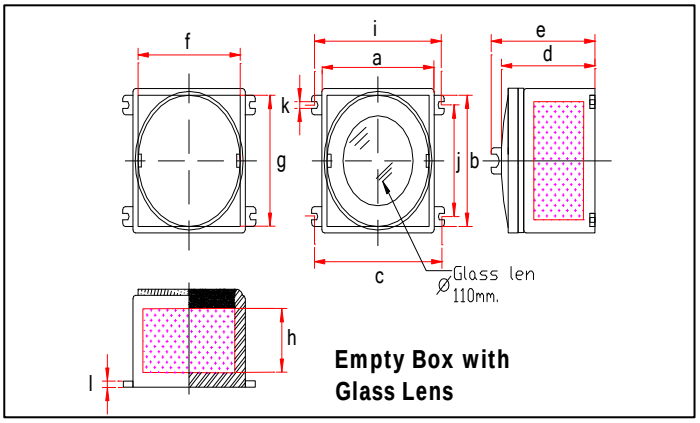

Catalogue Number

Enclosure Type	Cat.,No.	External a	b	c	d	e	Internal f	g	h	Mounting i	j	k	l	Approx. Weight(Kgs.)
Empty box with blank cover	JBR 886 B	200	200	260	147	163	170	170	84	230	160	12	10	7.5
Empty box with Dia. 110mm. Glass lens	JBR 886 L	200	200	260	147	163	170	170	84	230	160	12	10	7.5

Remark: In case the enclosures are supplied completely with control units or devices, they will be delivered with conformity certificate and can be used without further testing.